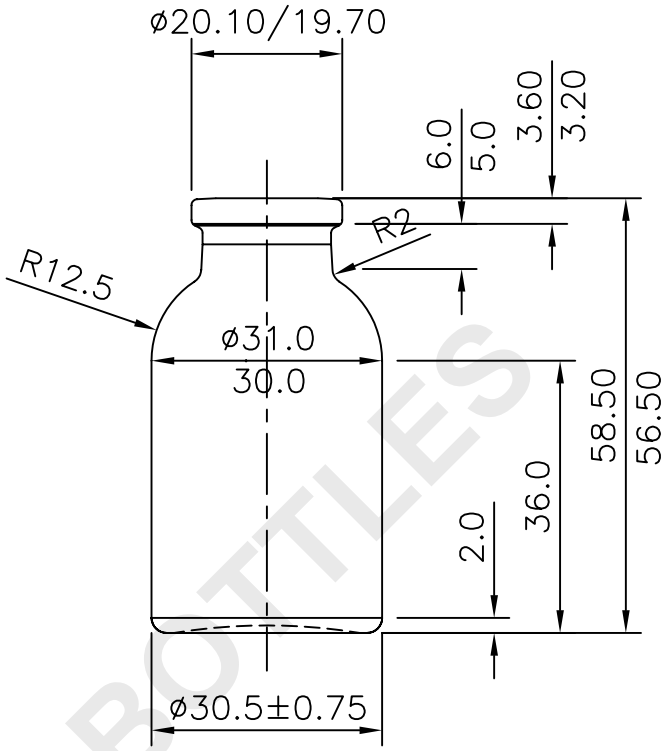

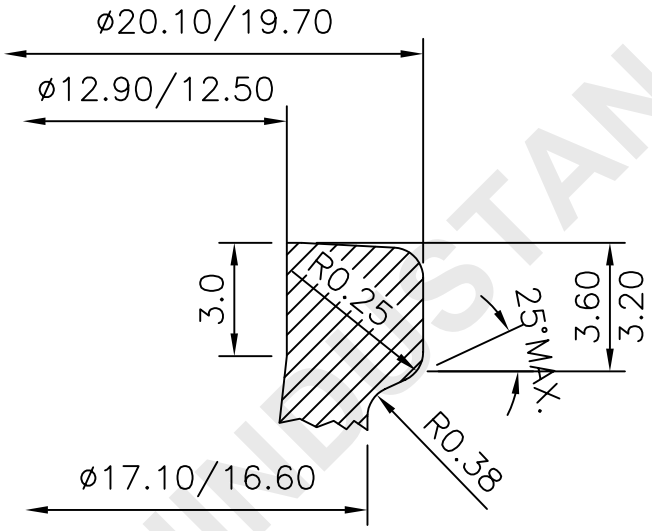

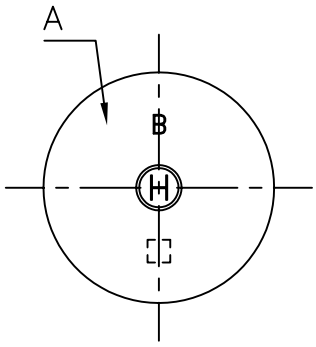

NECK DETAIL

ALL DIMENSIONS ARE IN MILLIMETERS

PROCESS	BLOW & BLOW							
MINIMUM THROUGH BORE	–				KNURLING NOT REQD. AS PER			
FILL POINT VERIFIED	NO	A	1.	–	SALES LETTER HJKB–9000–7251	21.03.01		
TILT ANGLE	–	REV.	No.	REF.No.	REVISION	DATE	CHK	
MAXIMUM DEPTH OF STANDARD ENGRAVING	–	FILL–POINT			–– ml ± – ml			
MAX. GAS VOLUMES	–	BRIMFUL CAP.			23.0 ml ± 1.5 ml			
REF DRG No :– W/FLT/B/1390/1		WEIGHT			30 Gms. ± 5 Gms.			
MOULD EQUIPMENT ORDERED BY		FINISH			20 MM VIAL	COLOUR	FLINT	
PLANT	B	SURFACE TREATMENT			NO	C.C. NO. 41390		

SPECIFICATION AGREEMENT ARE BASED ON TOLERANCED DIMENSIONS ONLY
DO NOT SCALE DRAWING
COPYRIGHT RESERVED. NOT TO BE COPIED IN WHOLE OR PART WITHOUT WRITTEN PERMISSION FROM H.N.G.LTD.

HINDUSTHAN NATIONAL GLASS & IND. LTD.

TITLE – 20 ML VIAL BOTTLE

CUST.: ALEMBIC CHEM. WORKS | CHECKED:

DRAWN: Rajesh 31.01.93 | APPROVED:

SCALE 1:1 | DRAWING No. : 41390 | A4 REV. A

HINDUSTAN BOTTLES